SPYING ROBOT

Dr. Vandana V. Kale, AISSMS's Institute of Information Technology, Pune

Roger Lokku, AISSMS's Institute of Information Technology, Pune

Neha Phadtare, AISSMS's Institute of Information Technology, Pune

Mrs. Kulkarni Sheetal Vijay, AISSMS's Institute of Information Technology, Pune

Abstract

In today's time, a human's life is of utmost importance when it comes to their well-being in industries or battlefields or day-to-day life and with automation and robotics being the leading technologies this has become a reality. The Spying Robot is used for surveillance purposes where a human does not need to go and manually survey the area. This paper speaks about the prototype that can be controlled over the internet by utilizing a Raspberry Pi which will act as a webserver, and an Arduino Mega which is responsible for driving the motors and detecting obstacles and motion. Remote.It are service providers that provide services to access over the internet the Pi and the webpage that it hosts. Experiments were carried out to determine the average accuracy of the two ultrasonic sensors and were calculated to be 99.13% and 98.44% accurate respectively. During testing, we observed an average delay of 14.79 seconds in the real-time footage obtained over the internet when compared with that on a local network and an average delay of 1.084 seconds in the motion of the robot after interacting with the buttons on the webpage. Although the photos were taken instantaneously. Being operated over the internet has major advantages i.e., increased range of operation and safety of the operators.

Keywords: Spying, Surveillance Robot, Raspberry Pi, Arduino Mega.

1. Introduction

A robot, in layman's terms, is a customized machine that substitutes human efforts. A robot can be an external control device, or the control might be implanted inside the bot. Robots have replaced humans in performing monotonous and risky tasks which people would truly prefer not to do, or can't do because of size limits, or which happen in absurd circumstances like space or the lower portions of the sea. These "unmanned machines", as they are called, can be aerial like a plane equipped with essential sensors, cameras, etc, or submerged vehicles like submarines or machines used for underwater surveillance, or they can be worked on grounds, on uneven regions to convey heavy weights or for patrolling, strategic planning or even for border surveillance. A spying or Surveillance robot is one such example.

Various research has been carried out in this field. N.Bhuvaneswary, S.Pravallika, V.Jayapriya, K.Himabindu [1] built a system that could detect the motion of any person, show video footage in real-time, and most importantly detect mines and bombs. The limitation of this paper was that the obstacles could not be detected. Madhiarasan, M. [2] put together a robot such that the bombs could be detected, the temperature and humidity of the environment can be computed, and message alerts and location could be obtained via GSM, but the motion and obstacles could not be detected. Sathyaprakash BP, et al., [3] tells that the robot could establish communication via Bluetooth module and be able to detect metals, and the location of the robot could be obtained. The limitations of this paper which we found were Bluetooth communication has short-range i.e., 10 m, and the motion could not be detected. M. K. Sharma et al.,[4] stated that in the Intervenor system, accurate intrusion could be perceived by the intrusion detection system, the intruder's image could be captured by the drone, he/she would be tracked, and the intruder identification could be done. The limitation was that the drone could only be used in open expanses, and anyone can alter the system settings i.e., change the sensor's alignment or relegate sensitivity. The vital information can be passed on to an intruder by the betrayer. V. Aarthi, R. Visali and K. K. Nagarajan [5] built a robot that could be controlled wirelessly using a web app, the thermal images could be observed through VNC, and it utilized the Firebase storage unit to store the images, its timestamp and the location of the robot. The thermal sensor used is not precise in detecting humans in all cases. D. Sharma and U. Chauhan [6] stated that their robot could be controlled wirelessly using a web app and with the help of the MI app, the real-time video footage could be observed. The location of the robot cannot be provided. A. K. Telkar and B. Gadgay [7] created a robot that could be controlled wirelessly using a web app. The proposed system has two modes of operation i.e., manual, and automated. If anybody is detected by the PIR sensor, a message would be sent, and the robot could be operated. S. Maheswaran et al., [8] assembled a robot that could be controlled wirelessly using a web app and it was equipped with a gas sensor that provides information about the quality of air, but the motion and obstacles could not be detected. Bhavyalakshmi R, B. P. Harish [9] stated that their robot could detect motion, objects, gas, and fire. A facial recognition algorithm was incorporated into the robot to identify the person and alert messages were sent if any atypical activity was sensed. Singh D., Nandgaonkar A. [10] specified that in their project, the objective of live streaming the video and audio as well as capturing an image was fulfilled. The likelihood of possible breakdown was reduced due to less wiring. The proposed system is not equipped with any sensors and the video transmitted is monochromatic as specified by the authors. Two android phones are required i.e., for real-time transmission of data and to control the movement of the robot. Dr. B. Ramesh et al., [11] assembled a robot that was equipped with a PIR sensor, used for motion detection and a camera for video surveillance. Upon detection of an intruder, an alert message is sent to the control room, and the image of the intruder is captured and emailed, but the location of the robot cannot be acquired, and the obstacles could not be detected. Joshi, S. A., A. Tondarkar, K. Solanke, and R. Jagtap [12] utilized an ultrasonic sensor in their system but the motion could not be detected, and the location of the robot cannot be acquired. Nayyar A., Puri V., Nguyen N.G., Le D.N. [13] put together a robot such that the environmental parameters like temperature and humidity could be obtained. MQ-6 Gas sensor detects the presence of Butane and Propane gases, whereas MQ-3 detects Alcohol and Gasoline. The obstacles could not be detected, and the location of the robot

cannot be obtained. Anandravisekar. G, Anto Clinton. A, Mukesh Raj. T, Naveen. L [14] created a robot such that motion, obstacle, and metal detection was possible. There are two modes of operation, manual and automated. The location cannot be obtained. H. Singhal, A. Mishra, A. Swaroop and A. Rathore [15] stated that through their system, the temperature of the environment can be measured, and metal detection is also possible. Orientation of the robot could be obtained using the accelerometer, but obstacle and motion detection is not possible. A.M. Alex et al. [16] tells that motion detection is possible and a LASER gun could be used to point at an intruder, but no obstacle detection was possible. Ashish Zade, Priyanka Rahangdale and Akshay Giri, [17] specified that their robot communicated over IEEE 802.15.4 communication protocol. The rate of data transfer is 250Kbps. The limitation was that no sensors were incorporated into the proposed system.

The most common limitation that we observed was the range of operation. The robots that were assembled, utilized Bluetooth modules and Wi-Fi networks through which they were being controlled. The Bluetooth modules have a range of 10 m whereas when Wi-Fi was used, it meant that the robot and the controlling device were connected to the same network. Thus, if the controlling device was in the range of either the Bluetooth module or the Wi-Fi network, then only the robot could be controlled. This led to the objective of making a prototype such that the issue of the range of operation would not be a concern.

In this paper we have described the methodology, stated the experimental results that we obtained, and the conclusion.

2. Methodology

As stated, the robots could only be operated in a particular range and the objective was to better the range of operation. One way of doing so was to control the robot over the internet using a webpage. This webpage would also show the real-time footage obtained using a camera, allowing the user to turn the camera, and also capture real-time images. The above said is implemented by utilizing a Raspberry Pi, Arduino Mega, and the services provided by Remote.It.

Since the Pi can be connected to the internet, we can access it or make it act like a webserver. The capability of the Pi being a webserver will assist in hosting a webpage at its IP address. We need to configure a static IP address as the IP address keeps changing (dynamic IP address). Thus, when on the local network, we can access the webpage by utilizing the static IP address of the Pi along with the port number at which the webpage is available. Remote.It is a website that provides services that help in accessing any device over the internet thus, the Pi being a webserver when accessed will host the webpage. The Remote.It needs to be configured on the Pi, this is done by giving a name to the service and adding the static IP address of the Pi along with the port number on which the service would be available. Therefore, since we would want to access the webpage and the live footage over different networks, we configure it by using the static IP address and the port number on which it will be available. Since we have configured a static IP address to the Pi, we will always be able to access the webpage and the live footage using Remote.It. Remote.It creates proxy links for the services that we would like to access over other networks.

A camera is interfaced to the Pi to obtain real-time footage. The real-time footage needs to be viewed on a webpage and this is achieved by installing a streaming service known as the MJPG Streamer. This streamer service shows the live footage on its website. The streamer provides a link by which we can view the live footage on the webpage by utilizing it in a <iframe> tag in the HTML code. The streamer service also needs to be configured in the Remote.It.

The Arduino Mega is utilized to control the motors, obtain information from the sensors, and communicate with the Pi via Bluetooth. The Pi will send special characters to the Arduino over Bluetooth, which then matches these characters with cases in the switch case statements, to drive the motors in a particular direction i.e., whether the robot has to move in the FORWARD, BACKWARD, RIGHT, or LEFT direction. These special characters are sent when the buttons on the webpage related to the motion of the robot are interacted with. When the robot is stationary, only then does the Mega send special characters related to motion detection, and depending on the characters, the servo motor is actuated +/- 90 degrees. It also sends latitude and longitudes when asked for by the user via the webpage.

2.1. Block Diagram

The block diagram of the system is shown in fig 1.

2.1.1. Raspberry Pi

The Raspberry Pi 4 Model B is a minicomputer that has 8GB RAM and utilizes the Broadcom BCM2711, quad-core Cortex-A72 (ARM v8) 64-cycle SoC @ 1.5GHz processor. It is equipped with four USB ports where two are 2.0 ports and two are 3.0 ports, two micro-HDMI ports, an ethernet port, GPIO (General Purpose Input/Output) pins, a microphone jack, Wi-Fi, and Bluetooth inbuilt, a CSI slot for camera and a DSI slot for touchscreen. It also has a micro-SD card slot in which the micro-SD card containing the Raspbian OS is inserted. The Pi has been connected to the Jio Fi Portable Wi-Fi router which provides internet to it. Thus, enabling the Pi to host a webpage i.e., becoming a webserver and also enabling the steamer to stream the live footage.

2.1.2. Arduino Mega

The Arduino Mega is based on the Atmega 2560 microcontroller which comes with 256 KB of flash memory which is used to store the program. The Mega has 16 analog pins, and 54 digital pins out of which 15 pins provide PWM signals, 5V, and ground pins. It also has pins for communication protocol purposes such as SPI and I2C. Additionally, it does have pins for serial communication as well. It has a 12V DC power jack and a USB slot through which the code is uploaded.

2.1.3. L293D Motor Driver Shield

On the Mega sits the L293D Motor Driver Shield based on the L293D IC, which is an additional circuitry board that is used to control DC motors, stepper motors, and servo motors. An L293D IC has a double channel H-Bridge and can control a pair of DC motors or a stepper motor. Since the shield equips two L293D IC, it can control four DC motors. The shield is also equipped with 74HC595 shift

register IC which extends the four digital pins of the Arduino to the eight direction control pins of the two L293D chips. The L293D board allows the usage of the A0 to A5 analog pins and provides additional 5V and ground pins. A power terminal is also provided to the shield to which the Li-Ion batteries are connected.

2.1.4. HC-05 Bluetooth Module

A HC-05 Bluetooth Module is interfaced to the Arduino Mega for communication purposes between the Pi and the Mega. It communicates with the microcontroller through the serial port. It is an IEEE 802.15.1 standardized protocol thus enabling the creation of a Personal Area Network (PAN). A red light on the module indicates the connection status, which blinks continuously when the module is not paired, or else after pairing it will blink having a constant delay. Special characters from the Pi are sent over Bluetooth to the Arduino which then executes necessary cases matching those special characters to drive the motors, stop the motors, or send GPS data and actuate the servo motor depending on the PIR sensor that detected any movement.

2.1.5. HC-SR04 Ultrasonic sensor

The ultrasonic sensor works on the principle of ultrasound waves which when emitted are reflected on striking an obstacle. The sensor emits an ultrasonic pulse of 40 Hz through the transmitter, and it is received by the receiver after it is reflected by the obstacle. When a signal is provided to the trig pin by the microcontroller, it sends out an ultrasonic pulse whereas the echo pin generates a signal and transmits it to the microcontroller only when the receiver receives the wave back. Two ultrasonic sensors are utilized to check for obstacle detection in front and behind the robot.

2.1.6. PIR sensor

All things emit infrared radiation. The PIR sensor or Passive Infrared sensor is made up of a pyroelectric sensor that detects the radiations that are emitted by humans/animals moving in its proximity. Two PIR sensors are interfaced to detect motion on either side of the robot. When motion is detected, the Mega sends a character to the Pi over Bluetooth. The Pi then actuates the servo in the required direction thus obtaining live footage of that area.

2.1.7. NEO 6M GPS module

It consists of the NEO 6M GPS chip, which is the heart of this module, a position fix led which blinks when it can track enough satellites, a 3.3V LDO regulator, battery, EEPROM, and an antenna. This module is a GPS receiver that provides strong satellite search capability and can track 22 satellites and provide coordinates of the location. The satellites transmit information in the form of radio waves. When the module receives these radio waves (information) from at least 3 satellites then the location can be obtained.

2.1.8. Camera

The camera used is OV5647 5MP 1080P IR-Cut Camera, which is interfaced to the CSI (Camera Serial Interface) slot on the Pi, through a 15-pin flexible ribbon cable. The camera and the servo motor are linked mechanically thus, we can turn the camera to the left or right, increasing the coverage area.

2.1.9. SG90 servo motor

A SG90 servo motor can rotate up to 180 degrees for the sole purpose of turning the camera i.e., 90 degrees in either direction. The servo motor is actuated when it receives PWM signals from the Pi. The duration of the pulse determines the angle of rotation.

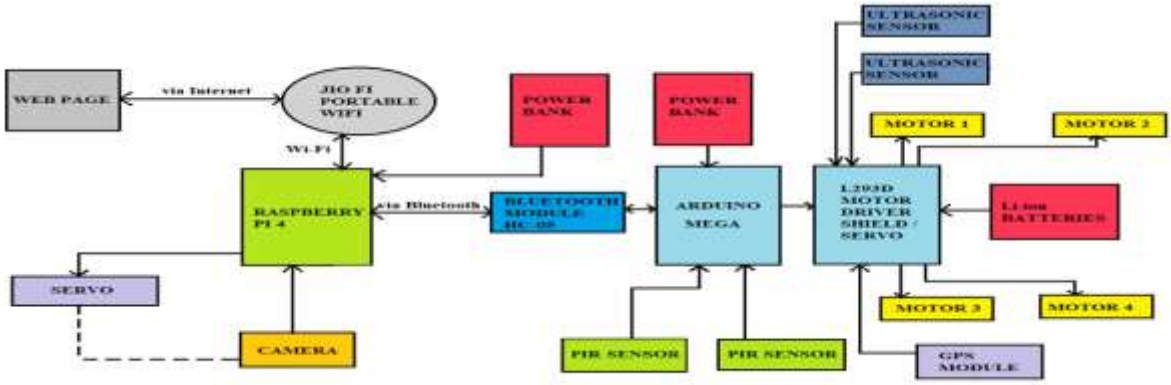

Fig 1: Block diagram of the system.

2.2. Interfacing with Arduino Mega

A power terminal is provided to the shield to which a pack of 4 Li-ion batteries is connected and to fulfill the current requirements a power bank is connected to the USB slot of the Mega. The sensors and the modules, each have a VCC and GND pin which need to be interfaced with the 5V and ground pin of the shield. The ultrasonic sensors have a trig and an echo pin. These pins of ultrasonic sensor 1 are connected to A0 and A1 respectively whereas, the same pins of ultrasonic sensor 2 are interfaced to A2 and A3 respectively. The GPS module's Tx pin is connected to pin A4, and the Rx pin is interfaced to pin A5. The PIR sensor has its output pin labeled as OUT and the OUT pin of PIR sensor 1 is interfaced to digital pin 50 whereas that of PIR sensor 2 is interfaced to digital pin 51. The HC-05 has a VCC and a GND pin which is interfaced with the 5V and ground pin of the shield. The Tx pin is interfaced to the Rx0 or D0 pin of the Mega whereas the Rx pin is interfaced through a voltage divider circuitry to the Tx0 or D1 pin of the Mega. The voltage divider circuitry is necessary as the signals from the Arduino's Tx0 pin are of 5V and the Rx pin of the HC-05 can only detect 3.3V, thus, the circuitry takes care that the voltage does not exceed 3.3V. R1 = 1K, R2 = 2K, Vin = 5V, thus by formula:

$$Vo = (R2/(R2 + R1)) * Vin$$

we get, Vo = 3.3V.

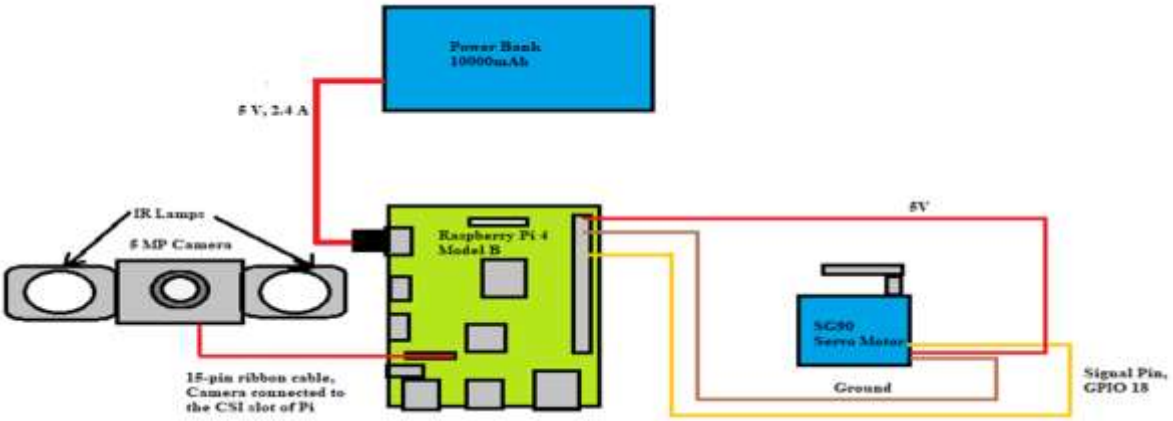

Fig 2: Components interfaced to the Arduino Mega.

2.3. Interfacing with Raspberry Pi

To the Pi, a 5MP camera with two IR lamps and a SG90 servo motor are interfaced. The servo motor has three wires where the red wire needs to be interfaced to the 5V pin, the brown wire to the ground pin, and the orange wire to the GPIO18 pin. The camera is interfaced to the CSI slot of the Pi using a 15-pin ribbon cable. A power bank is connected to the Pi which provides 5V and 2.4A to it.

Fig 3: Components interfaced to the Pi.

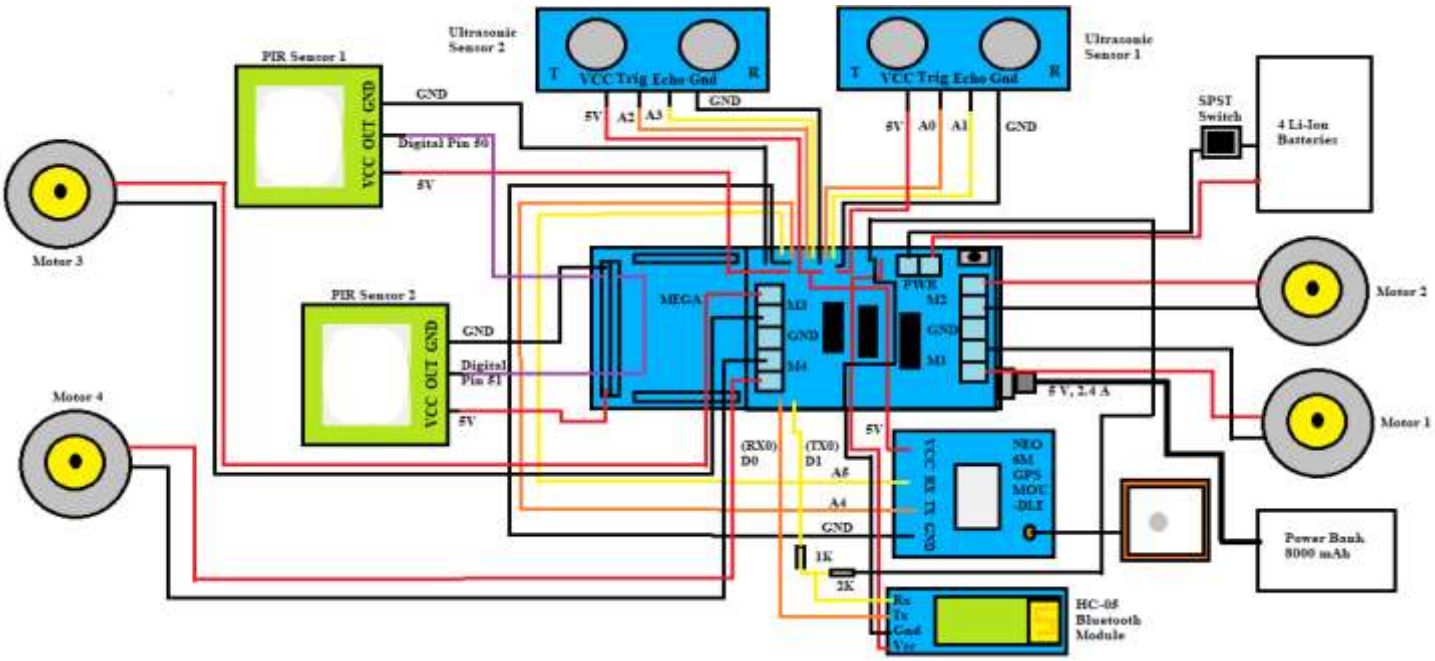

2.4. Software

2.4.1. Arduino IDE

Arduino IDE is a software solely for Arduino boards, which needs to be installed to code, compile, and upload the code into the microcontroller. It is an open-source software. Programs written in the Arduino IDE are known as sketches. We need to install various libraries through this software depending on what we interface with the

board. It is required to select the right Arduino board in the software as per the use. The software indicates the USB port at which the Arduino is connected and thus enables us to upload the program into it. A serial monitor is provided through which we can observe the data that the Arduino prints and also interact with the Arduino by sending data to it.

2.4.2. Mu

Mu is solely a python editor which can be used as soon as the Raspbian OS is installed. It consists of a text editor, an output window that opens when a program is executed and a debug option.

2.4.3. Geany

Geany is a text editor which is open source and a lightweight IDE. It can be used for multiple programming languages such as HTML, CSS, Java, PHP, etc. In this work, the HTML and CSS codes were written in Geany. One major advantage of this text editor was that it auto-closed the HTML tags thus making it simpler and easier for the user.

2.4.4. MJPG Streamer

The MJPG Streamer is a streaming service that helps in streaming real-time footage on the internet. This needs to be installed in the Pi and a port number has to be assigned to it. The MJPG Streamer webserver can be accessed using Pi's IP address and the configured port number on a local network.

2.4.5. Remote.It

Remote.It are service providers that help in accessing devices from anywhere in the world. It provides services to protocols such as VNC, Remote Desktop (RDP), SSH, Web (HTTP), Secure Web (HTTPS) etc. We need to create a login id and password on the Remote.It website. Remote.It also needs to be installed and configured in the Pi. Each protocol is configured by selecting the desired protocol wherein the static IP address of the Pi and the port number at which the protocol can be accessed is entered. In this work, we need to access the webpage and the streamer's webpage over the internet. The services were configured for both as they came under the Web (HTTP) protocol. Remote.It generates proxy links for the webpages.

2.5. Working

In the Pi, python, HTML, and CSS codes are executed whereas, in the Arduino, the code is developed in the Arduino IDE and uploaded into it. The streamer service needs to be accessed over the internet via Remote.It. The link that the streamer then provides needs to be updated in the HTML file. The Pi and Arduino need to be paired and then the python code needs to be executed. After execution of the code, the webpage needs to be accessed over the internet by generating its proxy link via Remote.It. This link when searched on a web browser will direct you to the webpage from where you can control the robot and see the real-time footage.

Each button on the webpage has a function mapped to its URL which is called when the button is interacted with. Depending on the button pressed i.e., if the button is related

to the motion of the robot and GPS, their respective functions send special characters to the Arduino over Bluetooth and the case matching those characters is executed. Buttons such as the panning of the camera left and right with the help of the servo, taking photos, and resetting the servo, have functions that are called by python itself.

3. Experimentation and Results

3.1. Experimentation

Two ultrasonic sensors were utilized in this work for obstacle detection. It was required to find the accuracy of both these sensors, and this was done by taking down ten readings and computing the average as shown in table 1. The experimental setup consisted of an ultrasonic sensor that was placed on a breadboard and interfaced to the Arduino, which was connected to the laptop via USB. The sensor was placed facing the wall and a measuring tape was used to measure the actual distance. The same was repeated for the other ultrasonic sensor.

3.2. Results

In table 1, the distance measured using the ultrasonic sensor is the measured distance whereas the actual distance refers to the distance measured manually. The average accuracy of ultrasonic sensor 1 was 99.13% and that of ultrasonic sensor 2 was 98.44%.

Table 1: Distance measurement using ultrasonic sensors.

Sr. No.	Ultrasonic Sensor 1			Ultrasonic Sensor 2		
	Measured Distance (cm)	Actual Distance (cm)	Accuracy (%)	Measured Distance (cm)	Actual Distance (cm)	Accuracy (%)
1	20	20	100	20	19.3	96.38
2	40	41	97.57	40	41.3	96.86
3	60	61	98.37	60	59.3	98.82
4	80	81	98.77	80	82	97.57
5	100	101.4	98.62	100	101.8	98.24
6	120	119.3	99.42	120	121.8	98.53
7	140	140	100	140	141.8	98.74
8	160	161	99.38	160	161.2	99.26
9	180	181.3	99.29	180	180	100
10	200	199.8	99.9	200	200	100
Average Accuracy (%)			99.13	Average Accuracy (%)		98.44

Accuracy (%) = 100 - ((|Actual Distance – Measured distance|)/Actual Distance) * 100

Let, Measured Distance = 100 cm, Actual Distance = 101.4.

Accuracy (%) = 100 - ((|101.4-100|)/101.4) * 100

Accuracy (%) = 98.62

The PIR sensors were utilized for motion detection, and it was observed that the sensor transmits a signal to the Mega when any movement takes place in front of it. It would also send false signals for which we had to adjust its sensitivity. Another observation was that whenever the robot moved, the sensor would transmit a signal which

led to false detection. Thus, it was only used to check for motion detection whenever the robot was stationary.

It was noted that the GPS module would only transmit the latitude and longitude if the robot is working in an open environment. The data transfer from Arduino to Pi over Bluetooth had to be limited to a certain number because it was observed that if the data transfer was continuous then we would lose data as well as the interactivity i.e., the control of the robot's motion.

The servo motor and the GPS module could not be interfaced to the Arduino as we utilized Software serial for the GPS module which resulted in the servo motor being actuated due to transmission of erratic pulses by the Arduino to the servo's control pin.

Since we were viewing real-time footage over the internet, it was observed that there was a delay in the footage obtained over the internet when compared to viewing it on the same network. The delay time was measured using a stopwatch. An average delay of 14.79 seconds was observed. This was calculated by noting down ten readings and then taking an average of them as shown in table 2.

Table 2: Delay in real-time footage obtained over the internet.

Sr. No.	Delay Time (seconds)
1	18.21
2	19.45
3	11.08
4	19.14
5	10.10
6	14.98
7	15.29
8	12.50
9	13.96
10	13.19
Average Delay Time (seconds)	14.79

The robot was also controlled over the internet via webpage interactivity, and it was observed that the robot moved after a certain delay. The delay time was measured using a stopwatch. An average delay of 1.084 seconds was calculated. This was calculated by taking down ten readings and then taking an average of them as shown in table 3.

Table 3: Delay in output via webpage interactivity.

Sr. No.	Delay Time (seconds)
1	0.73
2	1.06
3	0.80
4	1.66
5	0.99
6	0.86
7	1.39
8	1.04
9	1.06
10	1.25
Average Delay Time (seconds)	1.084

It was also noted that the internet data usage in 40 minutes was 0.75 GB. We were also able to take real-time photos. A glimpse of the prototype is shown in fig 4.

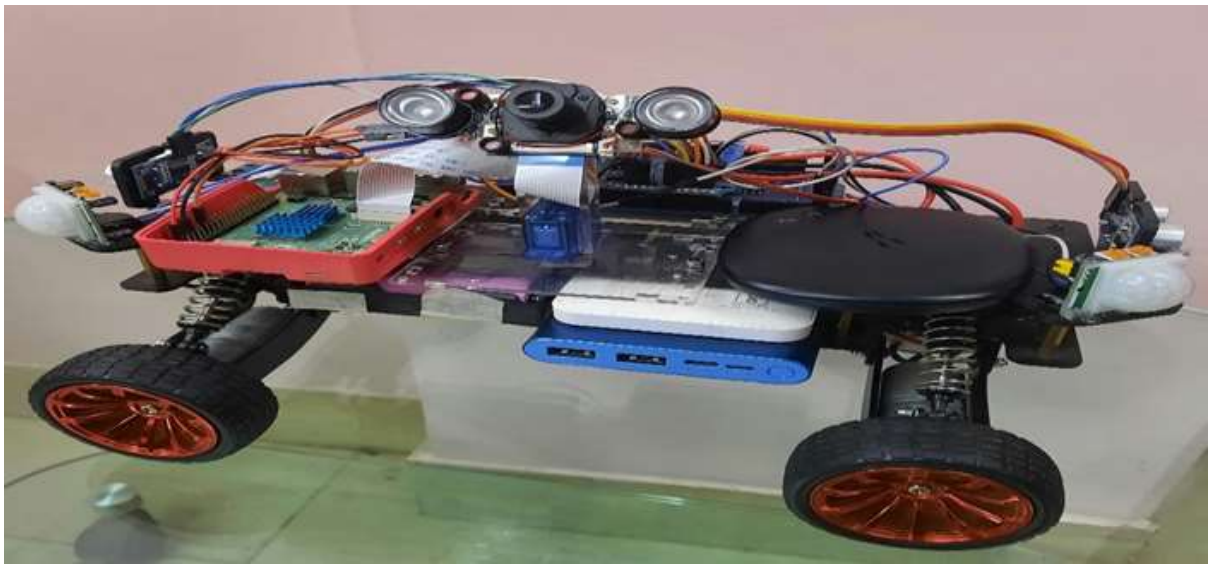

Fig 4: A glimpse of the robot.

4. Conclusion

The internet has surely been a blessing in disguise for current generation and for the generations to come. The objective of this work was to increase the range of operation. We were successfully able to control the robot over the internet thus helping in achieving the major objective. We were also able to view real-time footage on the webpage, interact with the buttons that helped control the robot, turn the camera left and right and also take photographs. The safety of the operators has increased as they would not have to move behind the robot.

We were able to calculate the average accuracy of each of the ultrasonic sensors which were 99.13% and 98.44% accurate respectively. The PIR sensors were observed to be useful only when the robot was stationary due to which it could not be used to detect motion when the robot was in motion. Delays were observed in both the live footage obtained and the robot's motion via the webpage interactivity. The delay in real-time footage was 14.79 seconds whereas the delay in the robot's motion was 1.084 seconds. The data utilized was 0.75 GB for 40 minutes. Thus, a strong internet connection played a vital role in this work.

Some of the shortcomings of the prototype were that the robot would stop if the power ran out, if the Jio Fi Wi-Fi Portable router goes out of range of a cellular tower and if for some reason the Bluetooth gets disconnected. It was observed that the prototype was not able to turn on rough roads and worked well on smooth surfaces. With additions to its mechanical and technological parts, the robot would be highly advantageous in the future.

References

[1] N. Bhuvaneswary, S. Pravallika, V. Jayapriya, K. Himabindu, “Night Surveillance Military Spy Robot using Raspberry Pi”, Annals of RSCB, pp. 5740–5747, Jun. 2021.

[2] Madhiarasan, M. “Design and development of IoT based solar powered versatile moving robot for military application.” Int J Syst Assur Eng Manag, vol-12, issue-3, pp. 437–450, 2021.

[3] Sathyaprakash BP, et al., "Surveillance Spy Robot with Wireless Night Vision Camera and Metal Detection", Turkish Journal of Computer and Mathematics Education (TUROMAT), vol-12, issue-12, pp. 2397 -2402, 2021.

[4] M. K. Sharma et al., "INTERVENOR: Intelligent Border Surveillance using Sensors and Drones," 2021 6th International Conference for Convergence in Technology (I2CT), pp. 1-7, 2021.

[5] V. Aarthi, R. Visali and K. K. Nagarajan, "Smart Spying Robot with IR Thermal Vision," 2021 7th International Conference on Advanced Computing and Communication Systems (ICACCS), pp. 183-187, 2021.

[6] D. Sharma and U. Chauhan, "War Spying Robot with Wireless Night Vision Camera," 2020 2nd International Conference on Advances in Computing, Communication Control and Networking (ICACCCN), pp. 550-555, 2020.

[7] A. K. Telkar and B. Gadgay, "IoT Based Smart Multi Application Surveillance Robot," 2020 Second International Conference on Inventive Research in Computing Applications (ICIRCA), pp. 931-935, 2020.

[8] S. Maheswaran et al., "Unmanned Ground Vehicle for Surveillance," 2020 11th International Conference on Computing, Communication and Networking Technologies (ICCCNT), pp. 1-5, 2020.

[9] Bhavyalakshmi R , B. P. Harish, “Surveillance Robot with Face Recognition using Raspberry Pi”, INTERNATIONAL JOURNAL OF ENGINEERING RESEARCH & TECHNOLOGY (IJERT), vol-08, issue-12, pp.648-652, December 2019.

[10] Singh D., Nandgaonkar A. “IOT-Based Wi-Fi Surveillance Robot with Real-Time Audio and Video Streaming.” In: Iyer B., Nalbalwar S., Pathak N. (eds) Computing, Communication and Signal Processing. Advances in Intelligent Systems and Computing, vol-810, pp. 639-637. Springer, Singapore, 2019.

[11] Dr. B. Ramesh et al., “An Android Based Intelligent Robot For Border Security”, International Journal of Computer Science and Mobile Computing, vol-8, issue-2, pp. 123 – 129, February 2019.

[12] Joshi, S. A., A. Tondarkar, K. Solanke, and R. Jagtap. “Surveillance Robot for Military Application”. International Journal of Engineering and Computer Science, vol-07, issue-05, pp. 23939-44, May 2018.

[13] Nayyar A., Puri V., Nguyen N.G., Le D.N. “Smart Surveillance Robot for Real-Time Monitoring and Control System in Environment and Industrial Applications.” In: Bhateja V., Nguyen B., Nguyen N., Satapathy S., Le DN. (eds) Information Systems Design and Intelligent Applications. Advances in Intelligent Systems and Computing, vol-672. Springer, Singapore, 2018.

[14] Anandravisekar. G, Anto Clinton. A, Mukesh Raj. T, Naveen. L, “IOT Based Surveillance Robot”, INTERNATIONAL JOURNAL OF ENGINEERING RESEARCH & TECHNOLOGY (IJERT), vol-07, Issue-03, pp. 84-87, March 2018.

[15] H. Singhal, A. Mishra, A. Swaroop and A. Rathore, “Military Companion Robot”, International Research Journal of Engineering and Technology, vol-4, issue-4, pp. 285-287, April 2017.

[16] A.M. Alex et al., "Android based intelligent robot for border security", International Research Journal of Engineering and Technology, vol-4, issue-4, pp. 2041-2043, April 2017.

[17] Ashish Zade, Priyanka Rahangdale and Akshay Giri, "X-bee Based Spy Robot with Night Vision Camera", International Journal of New Technology and Research (IJNTR), vol-3, issue-2, pp. 63-66, February 2017.