ISSN 2063-5346 *Section A-Research paper*

An Enhanced Quantum Algorithm for Error Correction And Improved Quantum Computing Speed

Dr.P.Sateesh[1*)], Dr.T.Vijaykumar [2)], Dr.Y.Seetha MahaLakshmi[3*)], Dr.S.Suresh4[)], Dr.S.Karunakarreddy[5)], Dr.P.Sivakumar[6)], Dr.N.Narendra Phanikumar[7)], G.Rameshbabu[8)]

[1]*Assistant Professor, St.Peter'S Engineering College, Department of Physics, India, TS, 500043*
[2]*Assistant Professor, CVR College of Engineering, Department of Physics, India, TS, 501510*
[3]*Assistant Professor, ST.Ann's College for Women, Department of Physics and Electronics, India, TS, 500076*
[4]*Assistant Professor, Seshadri Rao Gudlavalleru Engineering College, Department of S&H, AP, 521356*
[5]*Assistant Professor, Nalla Malla Reddy Engineering College, Department of S&H, TS, 500039*
[6]*Assistant Professor, St.Peter'S Engineering College, Department of Physics, India, TS, 500043*
[7] *Assistant Professor, St.Peter'S Engineering College, Department of Chemistry, India, TS, 500043*
[8]*Assistant Professor, Pace Institute of Technology & Sciences, Department of S&H.India, AP, 523001*

[1*] *sateesh.poonam@gmail.com*
[2*] *physicistvijay@gmail.com*
[3*] *sita.y2010@gmail.com*

Abstract: Quantum error correction (QEC) and error-tolerant quantum computing represent one of the most vital theoretical aspects of the quantum information process. Quantum Error Remediation is a theory on how to reverse or cancel noise and errors on quantum systems. The concept of quantum error correction is to represent redundant quantum information. LAWE (learning Algorithm with errors)-based cryptography, whose security is based on the hardness of the underlying LAWE issue, is one of the most promising. The quantum LAWE problem is a quantum version of the LAWE problem, where the resolution algorithm can interrogate the LWE oracle in quantum computing. For this quantum LAWE issue, Grover and Ben Criger recently showed an efficient quantum resolution algorithm, with a test candidate. In this article, we first present an improved version of Grover's resolution search algorithm, which can handle a higher error rate to achieve a greater probability of success. Oracles are used in many quantum algorithms, when the full implementation of a specific function is unknown. This algorithm for resolves constraint-satisfaction problems. We present a quadratic speed in running time by introducing amplitude amplification.

Keywords: Quantum algorithm, tolerant, Probability, Computing, Noise, Error correction, qubit, Surface code, Phase kickback.

Graphical abstract

An Enhanced Quantum Algorithm with Error correction (LAWE) makes outstanding applications in different fields.

Introduction

The micro-computer revolution of the late 20th century has arguably been of greater impact on the world than any other technological revolution in history [1]. The advent of transistors, integrated circuits, and the modern microprocessor has spawned literally hundreds of devices from pocket calculators to the iPod, all now integrated **by a world-wide** communications system. Preserve looking to suppressing quantum result in classically fabricated electronics or flow to the field of quantum information processing (QIP) in which we make the most them. We've seen that to construct a scalable quantum pc we need to construct a complicated electronic interface running at cryogenic temperature as near as possible to the quantum processor[2]. Quantum error Correction is an idea of the way to reverse or undo noise and mistakes on quantum structures. This theory turned into developed inside the '90, right when the sphere of quantum computing took off. It was believed that this idea changed into an absolute necessity for quantum computers to be ever realized [3]. Superiority of quantum error correction method is that quantum computer systems are required to do large computations. Such a computation or quantum circuit breaks down into many steps, namely unmarried and -qubit gates and a size of all of the qubits at the quit.

According to classical algorithms, there is no essentially better method than to guess and take a look repeatedly until we discover the proper configuration. The quantum errors correction is important as we need quantum computers to do huge computations [4]. Such computation or quantum circuit breaks down into many steps, namely unmarried and -qubit gates and a measurement of all of the qubits at the stop, if these logical qubits, have low errors charges, the quantum algorithms can be long and therefore recognize an effective quantum computation.

Quantum Classic Interface

In order to interface qubits with classical systems. That is non-quantum there by not exploiting quantum effects we study how an actual existence of quantum PC looks like. Basically, there may be the quantum processor where the qubits are and also you've visible implementations of qubits for a quantum

processor in different motion pictures. With a view to manage these qubits, you need an electronic interface to pressure the operations at the qubits, for instance single-qubit or -qubit operations[5]. at the identical time, you furthermore might need to read out the notion of the qubits, and this is completed additionally by way of the electronic interface. With a view to be a little bit clearer approximately what this entails, permit's have a look at some of examples. for instance, allows count on we have a qubit applied as a spin qubit using a single electron, and also you would really like to rotate this qubit. What we want to do is generate a magnetic subject that could have interaction with the magnetic dipole of the electron[6]. To do that, we are able to consider putting a wire subsequent to the qubit and allow a modern flow through the twine in order that a magnetic subject is generated that could engage with the electron. To do that we want to generate a sure microwave pulse with a certain amplitude and period, at a frequency tuned to the resonance of the electron, in order that the qubit can rotate as we want. Now, the amplitude and the form of this pulse will determine how the qubit exactly rotates [7]. So that you can see, through making use of a simply electrical sign, we will follow a unmarried qubit rotation within the quantum processor. in order that's an instance of manage. Permit's appearance now at an instance for the read-out. Once more, allows speak about a spin qubit using an unmarried electron [8]. This time we want to examine the magnetic dipole of a single electron. Which is very hard? So what human beings do, is that they make sure that the data inside the magnetic domain is translated into facts about the placement of the electrons. So by using correct timing the quantum processor we can ensure that, relying at the quantum state, the qubit moves to an extraordinary position or not. That exchange in position can be sensed by rate sensors next to the qubit [9].

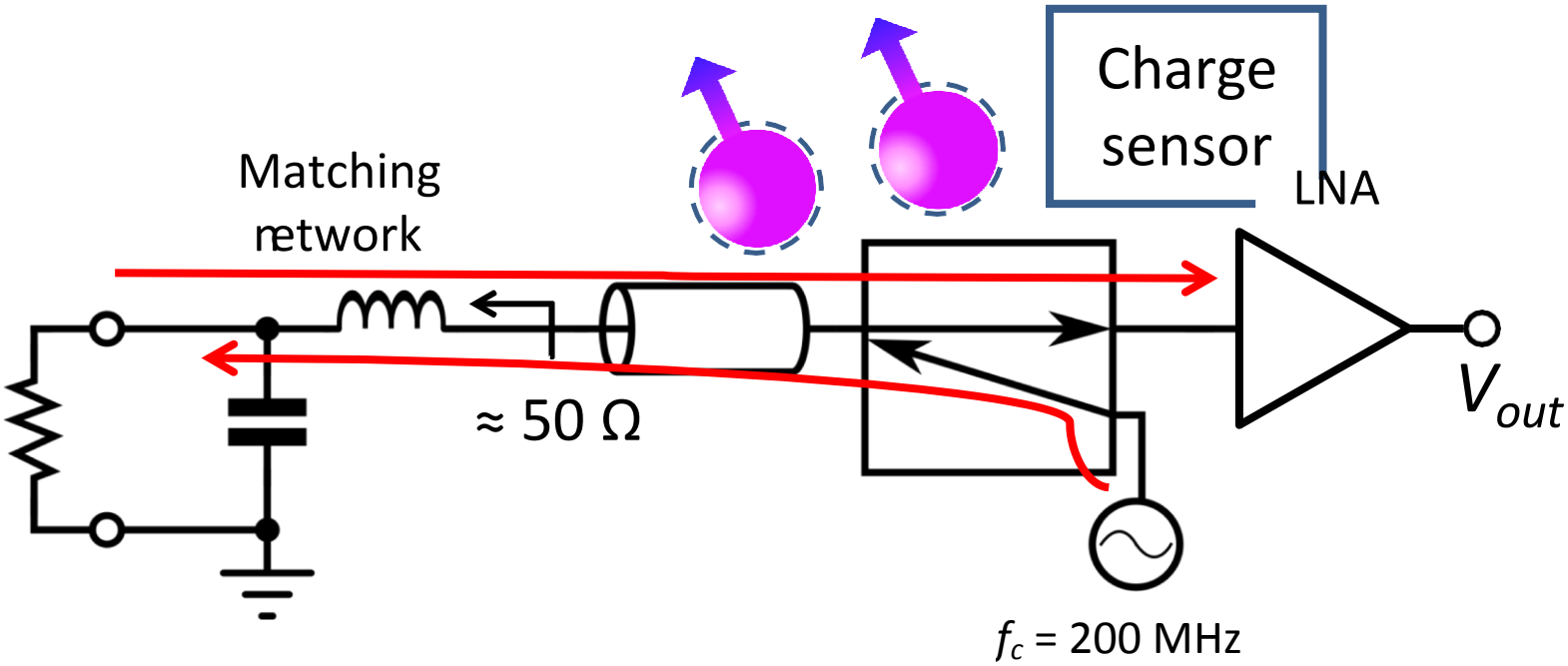

Fig 1.1 Example of a Scalable quantum Computer with quantum processor

Quantum Algorithms - Quantum circuits:

A set of rules is a chain of steps, which solves a problem when done so. Today, we are going to speak about how a quantum set of rules may be understood as a similar set of steps. With an intention to accomplish this, we need a language that gathers the quantum operations into larger tactics. Firstly, it must be smooth to explain the impact of a small operation on a large system, without disturbing the rest of the system. Secondly, we need to easily write out a technique that uses the output of one operation as the input for some other. Lets us consider the classical good judgment gates for inspiration. Right here, we see that the common sense gates of classical computing, AND and OR, which has its inputs and outputs carried by conducting wires. we will vicinity an empty twine subsequent to the OR gate to indicate a bit which is exceeded immediately thru the circuit, and we can join one of the output wires of the OR gate to the input of the AND gate, allowing us to build massive, complicated logical circuits out of small, simple additives [10].we are able to do some thing very comparable with quantum operations. This is the Hadamard operator, which has one input qubit and one output qubit. It's described through the 2*2 matrix at the proper. There also are two-qubit operations, together with the CNOT, which have two inputs and two outputs.

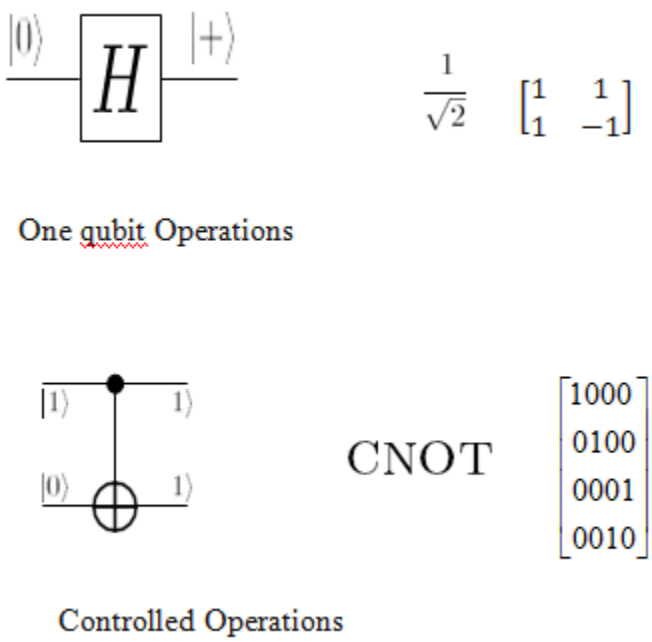

Figure 1.2 Qubit Operations

This operation is described through the four-by-4 matrix figure 1.2 now we come to the two strategies we use to compose small operations into large circuits. The first is that, on every occasion there's an empty twine, we area the identification operator on it, and in order to calculate the whole unitary that results from performing a small operation on a big set of wires, we take the tensor product of the operation with the ones identification operators. The second method is for feeding the outputs of one stage of a circuit ahead into a new stage, and it is perhaps a little simpler. We truly take

he normal matrix made of the two matrices that describe the degrees [11] It is important to be cautious right here, due to the fact the ideal order for placing those matrices is the opposite of the order that they appear inside the circuit. this is because, inside the matrix product, the right-maximum matrix is the first one implemented to the state psi.before we use those concepts to investigate a quantum circuit, right here are more examples of two-qubit quantum operations which you can see in a while, switch and CZ, which is also knownas CPHASE. Change may be used to exchange states between wires that are beneficial if qubit states want to be moved from one vicinity to any other for a few purposes. The CZ, however, only locations a minus join up the one-one element of anything state is input. An easier technique, which fits properly in this circuit, is to calculate the effects on individual foundation kets without writing them out in vector shape. This protects us a touch area. here we can see that the impact of the Hadamard gate on the second one qubit is to convert its kingdom into the plus-minus foundation. The CNOT [12] places a minus sign on the only-minus issue of the state, considering that plus and minus are the plus- and minus-one Eigen states of the X operator, and the very last Hadamard returns the states to the usual basis. This is same to the motion of the CZ gate on those foundation states. The third and very last method, which we're going to use to investigate quantum circuits is to explicit there relevant tensor merchandise without the usage of matrices, then attempt to simplify the resulting expression for the circuit.
As we will see, the tensor product expression for CNOT sandwiched with Hadamard simplifies to 0-0 tensor H squared plus one-one tensor H X H. it is clean to reveal the usage of -by means of-two matrix multiplication or ket notation that H-squared is the identification, and H X H is Z, leaving us with a managed-Z operation, whose motion we are able to affirm the use of basis states. those 3 techniques, and the quantum circuits that they are used to analyze, have a role to play within the layout of latest quantum protocols[13], and are critical gear for us to use in our knowledge of quantum algorithms.

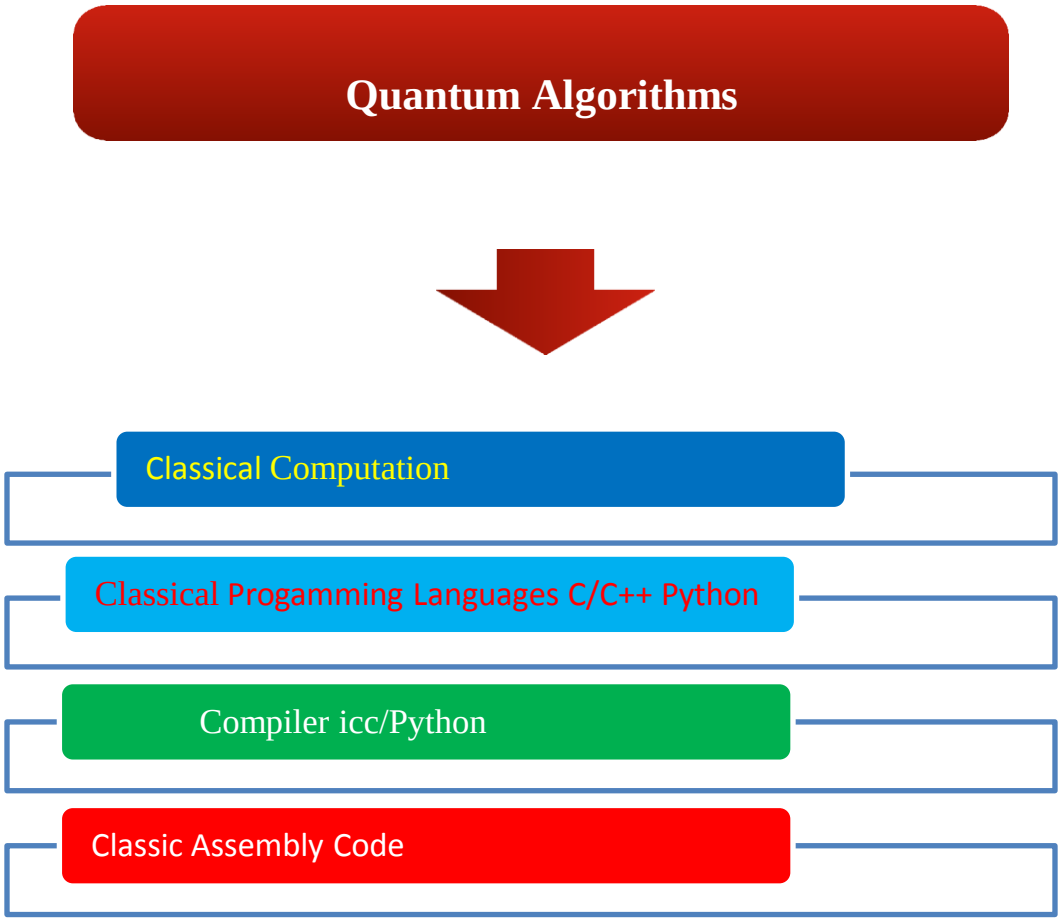

Figure 1.3 Quantum Algorithms

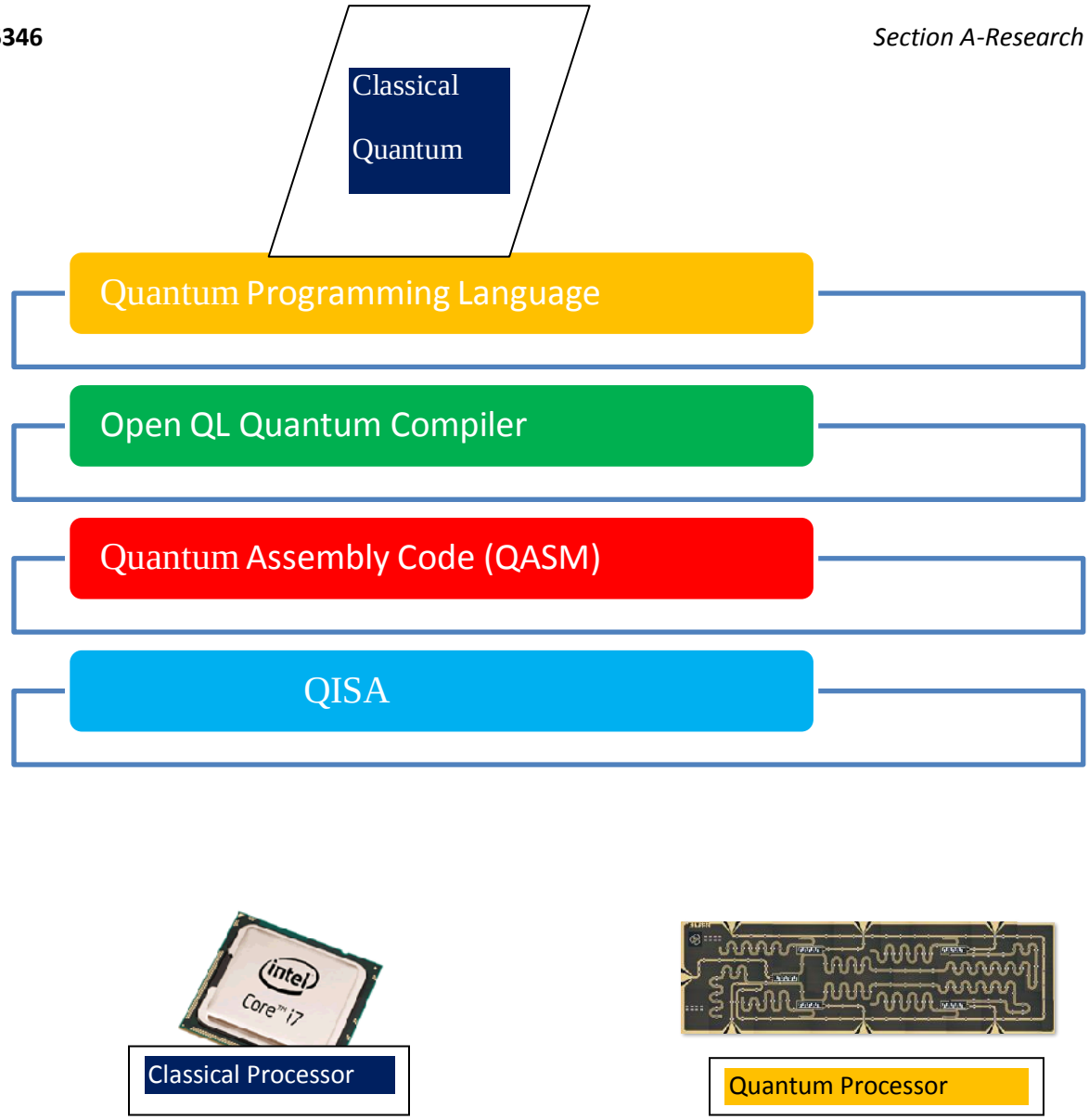

Fig 1.4 Heterogeneous **Programming Model**

Many algorithms such as Shor's algorithm or Grover's algorithm have many applications in security and data search, machine learning and designing new materials and developing new drugs.

The user can write his algorithm using a high-level language such as the Open QL language[14], compile it to transform the human readable code into executable code and execute the produced binary code on the quantum computer hardware[15].

Quantum Algorithms - Grover's algorithm:

Approximately another quantum set of rules that may not offer as large a speedup over its classical counterpart, does still have an exciting shape that makes it really worth discussing. The trouble to be solved is as follows. Imagine that there is an array of n switches, which all need to be set in an accurate configuration w, which will light a bulb. Now, to make the trouble tough, some of those switches were installed upside-down, and there's no guide mendacity around, so the all-up configuration isn't necessarily accurate, as it must be. If we tried a positive configuration of switches, some up, a few down, it would not tell us whatever approximately which transfer turned into set incorrectly, all we'd see is that the bulb is both lit or not. For this hassle, if we limit ourselves to classical algorithms, there is no essentially higher approach than to bet and test again and again until we discover w, the best configuration. This requires a number of transfer flips that scales as 2 to n, which can get quite big as n grows to lay out the corresponding quantum algorithm, we are going to make use of some other building block, the oracle. Oracles are used in many exclusive quantum algorithms, while the entire implementation [16] of a given feature is unknown. An oracle which is a black box that we refer is unitary, although we don't know the circuit complexity in its implementation. In location of a proper complexity that's labored out in terms of the distance and time price of running a quantum circuit, we use the wide variety of queries to the oracle, that's the wide variety of times that it's used, as a proxy. The oracle for the light bulb hassle will appear to be this. We enter a configuration z, some eigen state within the z basis on every qubit, and if the bulb might light up, an ancilla qubit gets flipped. Already we can see that, if we enter a minus state at the ancilla, we are able to attain what is called U_f, which maps w to -w and acts because the identity on all other states inside the z foundation. We can see that the operation U_f may be written as identification minus 2 instances w-w We also define every other unitary u+ that goes nearly the same thing, except that it acts as the identification at the all plus notion, and apply a minus one segment to any notion orthogonal to all the plus state within the x foundation [17]. Now, we're going to take the product of these two operators and contact it the Grover iterate G. We're going to expose within the following segment that if we observe G ok times to the all plus state as an input, we end up with a state it truly is very close to w, the state defined inside the winning configuration.

The first part of G, U_f, just locates a minus sign up the w time period, sufficient to see the outcome of performing U_+, even though, one knows the need to define any other state +, that is only a state that's orthogonal to the all plus kingdom, written out the usage of w and w. Now we can express U_f + inside the +, +perp foundation, the usage of a touch bit of trigonometry [18]. in the end, we get to the expression cos 2 theta + - sin 2 theta + perp. making use of U_+ and changing the foundation returned, we will see that the Grover iterate takes our preliminary perspective theta and replaces it with the perspective three theta. If we did this okay times in a row, we'd become with not 3 theta, however 2 ok +1 theta. With a view to attain a state close to w, then, we should pick ok so that the sine of 2 k + 1theta is near one. Now, the sine is close to 1 while the angle is near pi by means of 2, so this offers us a ok more or less identical to pi divided through 4 theta, that is kind of pi/4 instances root 2 to then. This scales because the square root of the number of configurations we'd must strive inside the classical case, supplying us with a set of rules that has a polynomial speedup over the classical one.

Quantum Error Correction:

This concept became an absolute necessity for quantum computers to be ever realized. The cause that quantum mistakes correction is essential is that we need quantum computers which perform massive computations. The present type of computation [18] or quantum circuit breaks down into many steps, namely single and two-qubit gates and a dimension of all the qubits at the give up.

When each gate fails to perform properly with a few chances, then these screw ups will acquire leading to a final solution which can't be relied on. And the more gates inside the circuit, the higher the risk that the final outcome could be basically clumsy further, a qubit which does not go through any gate, tends to decohere and loosen up to a hard and fast, normally thermal, state. So in order to make the failure opportunity in step with gate low, as an instance as low as10^{-15}.

Quantum Error Correction

Table: 1.1

Z_1Z_2	Z_2Z_3	Correction
+1	+1	Nothing
+1	-1	Apply X_3
-1	+1	Apply X_1
-1	-1	Apply X_2 or X_1X_3

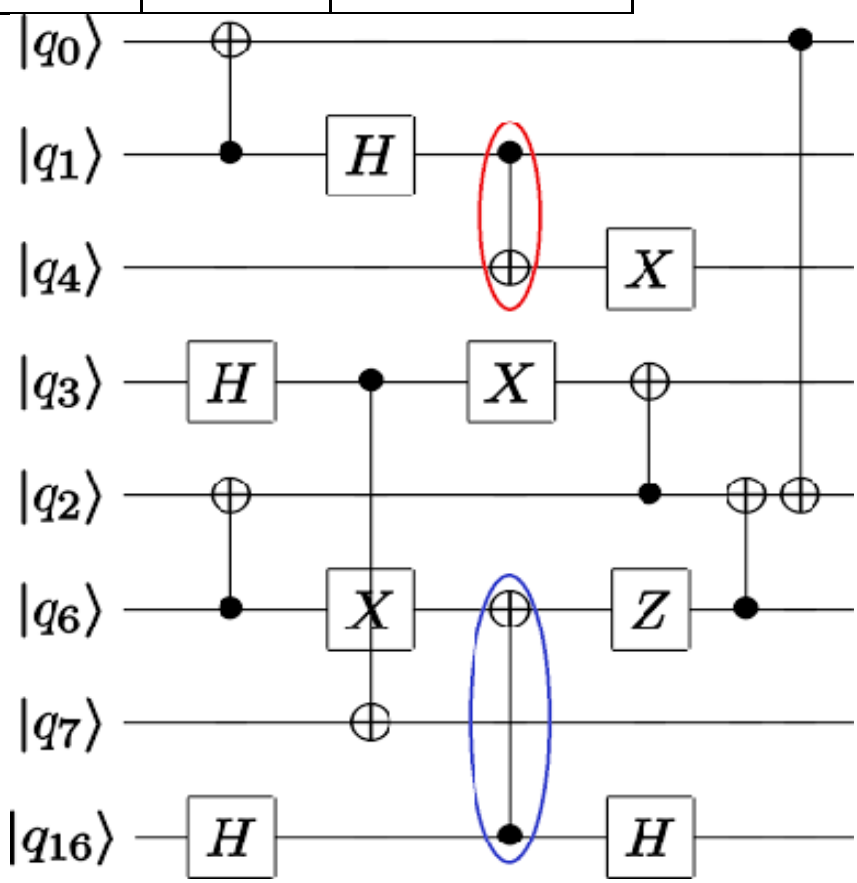

Fig 1.5 Qubit Addressing and Routing

Qubit Routing

Qubit Symbol	Physical Address
q0	(0,1)
q1	(2,2)
q2	(1,2)
q3	(3,5)

Table: 1.2

Enhanced Gover's Algorithm

The idea of quantum error correction is to symbolize quantum facts redundantly. For example instead of an unmarried qubit, we use 7 qubits. And these together represent one new so-referred to as logical qubit. In this logical qubit we operate as follows. First, we continuously display for errors on any of the 7 qubits. We will do that by measuring thesequbits, why no longer, otherwise we lose their kingdom as an alternative, we are able to include virtually ancilla or helper qubits, which we couple to the statistics qubits and we will handiest read out the ancilla qubits. And with this error statistics we infer what mistakes have happened in this manner we will undo or reverse those mistakes. A qubit can go through two sortsof essential errors, there's bit turn and there are section flip errors. All other errors on a qubit are linear combos and/or products of these errors. Now quantum errors correction codes are designed such that only mistakes on small subsets of qubits may be corrected for instance, for the 7 qubits shown formerly, an error on any single qubit can be corrected, but not an blunders on any subset of two or greater qubits.
Mistakes correction is then powerful when errors on unmarried qubits are more likely than errors on pairs of qubits. In different phrases, possibly mistakes will get corrected and the less likely mistakes will stay. So we improve subjects. Through adding more redundancy, as an example representing a single logical qubit with the aid of, say, forty nine qubits, possible correct large subsets of errors. And because of this the failure rate of the logical qubit, which is determined through the errors which do not get corrected, can get without a doubt small. With 10.000 qubits it may be viable to have a failure rate of 10^{-15}, particularly with a code referred to as the floor code. An attractive characteristic of the floor code is that its qubits may be bodily placed on a 2nd planar chip and simplest nearby connections are needed for error correction and logical gates. But what quantum mistakes correcting codes are there and which one is in truth the first-class? Nicely, there is numerous training of codes and there is no one unmarried answer to which one is fine. A code can in fashionable encode k into n qubits. Furthermore, the code has far because of this that it may correct nearly as much as d/2 errors. The Steane code that we have seen has distance three and it could accurate an unmarried blunders. So generally one would love to have an excessive distance and high k as opposed to n.

The maximum common class of quantum mistakes correcting codes is stabilizer codes. For these codes, errors facts is amassed by executing so-known as parity check circuits, For a number of those stabilizer codes one gathers records approximately X and Z errors one at a time. In this sort of case one uses two varieties of circuits to gather errors records. One circuit is for Z errors, proven at the top, a different circuit for X mistakes, shown at thebackside. As an example, we can have circuits, which have a look at the parity of a subset of four qubits, as you notice at the slide. Now, if any of the qubits has a Z mistakes on enter, the ancilla qubit will be flipped on the give up, heralding the error. You may confirm this self. Similarly, to locate and correct an X blunders possible use the circuit at the lowest whose ancilla qubit is flipped on output whilst any of the incoming qubits has an X mistakes. For the Steane code that we've visible, there are parity tests on 3 subsets of qubits. Those subsets are colored red, inexperienced and blue. For each subset there's a parity take a look at for detecting and correcting X errors and there may be parity take a look at for detecting and correcting Z mistakes, as a result there are 6 assessments to be measured in overall. A parity test circuit is constituted of gates that can fail themselves. For instance, an X blunders can occur on the ancilla qubit after the second one CNOT gate. it may be that the CNOT itself produces this mistake. This X mistakes causes the control of the next 2 CNOT gates to turn. The effect is two extra X-flips on of the data qubits. If our code was no longer made to accurate these two X mistakes, then that is certainly terrible.

Because it took handiest 1 fault of that CNOT, to motive 2 mistakes. Proven at the left is a distance-7 floor code with 49 qubits, there is a qubit on each lattice website –it's now not drawn. Every black rectangular represents an X-parity check among four qubits detecting a Z mistakes. every white square represents a Z-parity check which in addition detects X errors on the 4qubits on which it acts. on the boundary of the lattice the parity checks contain best qubits. the distance of the code is 7 because the logical operators of the logical qubit act on at least 7 qubits. you spot the logical operators at the slide. The defining characteristic of the logical X and Z operators is they collectively anti-shuttle, however on the same time they trip with all the parity exams. You may verify this self by using using that X and Z anti-commute when they act on the same qubit, in any other case they trip. Proven on the very proper is the smallest exciting surface code which has 9 qubits and it has distance 3.To execute the parity take a look at circuits for the floor code, we upload ancilla qubits to the statistics qubits, as you spot within the slide. The ancilla qubits may be located within the middle of the plaquettes in order that they have interaction thru CNOTs, via managed NOTs, with the neighboring statistics qubits. One quantum errors correction cycle is the execution of these parity exams. Right here you notice X and Z errors at the records qubits are detected by the parity test circuits. The ancilla qubits are colored blue when they come across an X or a Z error

Now we will consider the usage of larger and large surface codes with distance three and up. If the error price on every gate is below a few essential costs, the error correction system or those error correction cycles, improve with large d. particularly we observe that the logical failure rate will lower exponentially in d. But, if the error fee on each gate is above a few vital values, then rather than mistakes correction turns worst with larger d. The whole mistakes correction code makes mistakes more likely as opposed to less probability. The vital blunders price in keeping with gate is known as the noise threshold. This threshold depends on the method of processing mistakes information and it relies upon on he kind of mistakes present. It lies between 0.5 and 1% for the floor code. as a consequence so as for hardware to benefit from the use of surface code error correction, it method that idling steps, unmarried-qubit and -qubit gates all need to have blunders charge as a minimum beneath 0.5%.Accomplishing errors costs this low or lower is thus an vital goal for qubit hardware. We are currently on a long and

steep avenue toward fault-tolerant quantum computing. And on this avenue there are many steps and milestones.

.

Future scope and Conclusions:

Experiments at numerous labs have shown a way to stumble on unmarried blunders the usage of a 4 qubit code and a way to save a piece, just as ordinary classical bit, the usage of 3 or five qubits. Experiments to implement the smallest 9-qubit surface code are currently being deliberate. In different phrases, it has not but been proven experimentally that with an increasing number of redundancy a logical qubit will have an extended and longer lifetime as soon as we keep a logical qubit, allow's say that is a hit, we will follow schemes that let us do single and two-qubit gates on those logical qubits as properly. we have many theoretical schemes available for this. Which means that once we've got logical qubits we will envision walking quantum algorithms on these qubits. And if these logical qubits have less mistakes fees, the quantum algorithms can be long and subsequently realize an effective quantum computation.

References:

1. M. Takita et al. Experimental demonstration of fault-tolerant state preparation with superconducting qubits, Phys. Rev. Lett. 119, 180501 (2017)
2. E.Cambell, B.M. Terhal, C. Vuillot, Roads towards fault-tolerant universal quantum computation, Nature 549, 172-179 (2017)
J. Kelly et al., State preservation by repetitive error detection in a superconducting quantum circuit, Nature 519, 66-69 (2015)
B.M. Terhal, Quantum Error Correction for Quantum Memories, Reviews of Modern Physics 87, 307 (2015)
3. M.H. Devoret and R. Schoelkopf, Superconducting Circuits for Quantum Information: an Outlook Science 339, 1169 (2013).
4. P. Aliferis, F. Brito, D.P. DiVincenzo, J. Preskill, M. Steffen, and B.M. Terhal. Fault-Tolerant Computing With Biased-Noise Superconducting Qubits. New. J. Phys., 11:013061, 2009
5. R.S. Andrist, H. Bombin, H.G. Katzgraber, and M.A. Martin-Delgato. Optimal error correction in topological subsystem codes. Phys. Rev. A., 85:050302(R).
6. P. Aliferis and A.W. Cross. Subsystem fault tolerance with the Bacon-Shor code. Phys. Rev. Lett., 98:220502, 2007
7. P. Aliferis, D. Gottesman, and J. Preskill. Accuracy threshold for Quantum Computation. Quant. Inf. Proc., 8:181–244, 2008
8. R. Alicki, M. Horodecki, P. Horodecki, and R. Horodecki. On thermal Stability of topological qubit in Kitaev's 4D Model. Open Syst. Inf. Dyn., 17:1, 2010.
9.O. Astafiev, Yu. A. Pashkin, Y. Nakamura, T. Yamamoto, and J.S. Tsai. Quantum Noise in the Josephson Charge Qubit. Phys. Rev. Lett., 93:267007, 2005.
10.T. Aoki, G. Takahashi, T. Kajiya, J. Yoshikawa, S.L. Braunstein, P. van Loock, and A. Furusawa. Quantum Error Correction Beyond Qubits. Nature Physics (London), 5:541, 2009
11.H. Bombin, R.S. Andrist, M. Ohzeki, H.G. Katzgraber, and M.A. Martin-Delgato. Strong Resilience of Topological Codes to Depolarization. Phys. Rev. X., 2:021004, 2012.
12.S.J. Devitt, W.J. Munro, and K. Nemoto. High Performance Quantum Computing. Prog. Informatics, 8:1–7, 2011
13.A.G. Fowler, A.M. Stephens, and P. Groszkowski. High threshold universal quantum computation on the surface code. Phys. Rev. A., 80:052312, 2009.

14. S. Asaad et al., "Independent, extensible control of same-frequency superconducting qubits by selective broadcasting," NPJ Quantum Inf., vol. 2, p. 16029, Aug. 2016
15. F.-W. Kuo et al., "A Bluetooth low-energy transceiver with 3.7-mW alldigital transmitter, 2.75-mW High-IF discrete-time receiver, and TX/RX switchable on-chip matching network," IEEE J. Solid-State Circuits, vol. 52, no. 4, pp. 1144–1162, Apr. 2017.
16.G. Gualco, J. Anders, A. Sienkiewicz, S. Alberti, L. Forró, and G. Boero, "Cryogenic single-chip electron spin resonance detector," J. Magn. Reson., vol. 247, pp. 96–103, Oct. 2014.
17. K. Das and T. Lehmann, "Effect of deep cryogenic temperature on silicon-on-insulator CMOS mismatch: A circuit designer's perspective," Cryogenics, vol. 62, pp. 84–93, Jul./Aug. 2014.
18. H. Homulle et al., "A reconfigurable cryogenic platform for the classical control of quantum processors," Rev. Sci. Instrum., vol. 88, no. 4, p. 045103, 2017.